Chroma-Q™
Color Block 2™ System

User Manual

Version 1.0 April 2009
Software Version 2.1

PN: 603-0500

Disclaimer

The information contained herein is offered in good faith and is believed to be accurate. However, because conditions and methods of use of our products are beyond our control, this information should not be used in substitution for customer's tests to ensure that Chroma-Q products are safe, effective, and fully satisfactory for the intended end use. Suggestions of use shall not be taken as inducements to infringe any patent. Chroma-Q sole warranty is that the product will meet the sales specifications in effect at the time of shipment. Your exclusive remedy for breach of such warranty is limited to refund of purchase price or replacement of any product shown to be other than as warranted.

The colour of the extrusion and the colour of the end plates and feet might be slightly different because of the difference in the alloy material and the grain finish of the metal of the extrusion and the metal end plates and feet. This is valid for any colour including clear anodising/silver.

Chroma-Q reserves the right to change or make alteration to devices and their functionality without notice due to our on going research and development.

The Chroma-Q Color Block 2 System has been designed specifically for the lighting industry. Regular maintenance should be performed to ensure that the products perform well in the entertainment environment.

If you experience any difficulties with any Chroma-Q products please contact your selling dealer. If your selling dealer is unable to help please contact support@chroma-q.com. If the selling dealer is unable to satisfy your servicing needs, please contact the following, for full factory service:

Outside North America:
Tel: +44 (0)1494 446000
Fax: +44 (0)1494 461024
support@chroma-q.com

North America:
Tel: 416-255-9494
Fax: 416-255-3514
support@chroma-q.com

For further information please visit the Chroma-Q website at www.chroma-q.com.

Chroma-Q is a trademark, for more information on this visit www.chroma-q.com/trademarks.

The rights and ownership of all trademarks are recognised.

LICENSED BY
COLOR KINETICS

Table of Contents

1. Product overview 3
- 1.1 Chroma-Q Color Block 2 3
- 1.2 Chroma-Q Color Block Power Supply Units 3

2. Operation 4
- 2.1 Unpacking the units 4
- 2.2 Cabling 4
- 2.3 Fixings 7
- 2.4 Control 9

3. Troubleshooting 19

4. Specification 19
- 4.1 Technical specifications – Color Block 2 19
- 4.2 Technical specifications – Color Block Power Supply Units 20
- 4.3 Photometric Performance 21
- 4.4 Drawings 21

5. Maintenance 22

6. Battery Replacement 23

7. Installation 23

8. Wiring 23

9. Accessories 24

1. Product overview

1.1 Chroma-Q Color Block 2

Following the enormous success of the Chroma-Q Color Block™ LED fixture with rental companies and end users alike, the manufacturer has combined the product's core elements of modularity and versatility with new single color RGBA optics, 530 lumens output (almost double the original model) and theatrical grade dimming to create the exceptional feature set of the Color Block 2 fixture.

With its radically increased color palette and high CRI of 90, the Color Block 2 fixture is a master at creating vibrant bold colors and subtle theatrical hues. Combined with its built-in variable color temperature capability, even flesh tones look natural, satisfying all but the most critical eye.

The four large, camera-friendly LED cells offer performers less glare and mix beautifully for single color output, virtually eliminating the frustrating color separation shadows normally synonymous with LED lighting. The beam optics have a soft asymmetrical quality carefully crafted to give an immediate perfect color blend for uplighting surfaces, yet retain a soft Fresnel-like edge for direct illumination. At close to twice the output of its predecessor, the Color Block 2 fixture is bright enough to uplight a 6m / 20 feet set and then some.

Each Color Block 2 fixture features 48 high output LED set into 12 single optic RGBA clusters that are grouped into 4 cells which produce an intense, powerful light and vibrant colours across the spectrum.

The control options incorporate a choice of HSI (Hue, Saturation and Intensity), RGBA (Red, Green, Blue, Amber), RGB(A) (Red, Green, Blue, with *Magic Amber), RGBI (Red, Green, Blue with *Magic Amber and Intensity) control modes, and a dynamic Variable Effects Engine integrated in the software which gives the lighting designer full control over colour and effects combinations.

The product's lightweight yet robust, heavy gauge aluminium extruded construction houses a discreet cable management system and additional protection is built around the LED lenses for a truly road proof fixture.

A range of DMX controlled power supplies are available to accommodate most applications. Each Color Block Power Supply features XLR4 outputs with a maximum capacity of 5 Color Block 2 fixtures daisy chained together. See separate PSU user manual for control details.

* Magic Amber is the term used for the unit's ability to bring in Amber when mixing colours that require it

1.2 Chroma-Q Color Block Power Supply Units

Two DMX controlled power supply models are available to accommodate most applications or operate independently as a stand alone system. Each Color Block Power Supply features outputs via XLR4. The unit can be controlled remotely via ANSI E1.11 USITT DMX 512-A (XLR-5 pin).

Color Block PSU-05B
The Color Block PSU-05B is a power supply suitable for up to 5 Color Block DB4 LED fixtures or 5 Color Block 2 LED fixtures. It can be controlled remotely via ANSI E1.11 DMX 512-A in a variety of modes to accommodate most applications or can operate independently as a stand-alone system.

The Color Block PSU-05B delivers power and data via 1 XLR4 output. A maximum of five daisy-chained Color Block 2 fixtures can be connected to the PSU-05B. Return lines are not required. The total cable length of each chain must not exceed 60m/200ft. Two in/out ethernet RJ45 connectors are available for synchronisation.

Color Block PSU-30
The Color Block PSU-30 is a 2U 19″ rack mounted power supply suitable for up to 30 Color Block DB4 LED Fixtures or 30 Color Block 2 LED Fixtures. It can be controlled remotely via ANSI E1.11 USITT DMX 512-A in a variety of modes to accommodate most applications or can operate independently as a stand-alone system.

The Color Block PSU-30 delivers power and data via 6 XLR4 outputs. A maximum of five daisy-chained Color Block 2 fixtures can be connected to each XLR4 output. Return lines are not required. The total cable length of each chain must not exceed 60m/200ft. Two in/out Ethernet RJ45 connectors are available for synchronisation.

2. Operation

2.1 Unpacking the units

The Color Block 2 package includes 1 unit Color Block 2 fixture and a Quick Start Guide. We recommend that you keep the original packaging in case item needs to be returned.

The Color Block PSU-05B package includes 1 unit PSU-05B, IEC power cord and a Quick Start Guide. The Color Block PSU-30 package includes 1 unit PSU-30 and a Quick Start Guide.

2.2 Cabling

DMX Input control data from an external control console is through an XLR 5-pin cable:

Pin#	Function
1	Ground (Screen)
2	Data Minus
3	Data Plus
4	Spare Data Minus
5	Spare Data Plus

Power and control data outputs from the Color Block power supply to the fixture is through an XLR 4-pin cable. The drain wire should be connected to the chassis of the XLR.

Pin #	Function	Minimum Cable size
1	Ground (-ve)	2.50mm^2 (14 AWG)
2	Control data minus (-)	0.35mm^2 (22 AWG)
3	Control data plus (+)	0.35mm^2 (22AWG)
4	24V DC (+ve)	2.50mm^2 (14 AWG)
Chassis	Cable shield/drain wire	0.25mm^2 (24 AWG)

Only genuine Tourflex Datasafe cable is recommended for use with the Color Block 2 system. Damage will occur if power connections short-circuit to data or ground shield connections. When assembling XLR4-pin cables, heat shrink should be used on each individual data pin and the drain wire to prevent short circuits.

The **Color Block PSU-05B** delivers power and data via 1 XLR4 output. A maximum of five daisy-chained Color Block 2 fixtures can be connected to the PSU-05B. Return lines are not required. The total cable length of each chain must not exceed 60m/200ft.

It is recommended that a maximum of 20m XLR4 cable length should separate adjacent fixture units as to avoid signal deterioration.

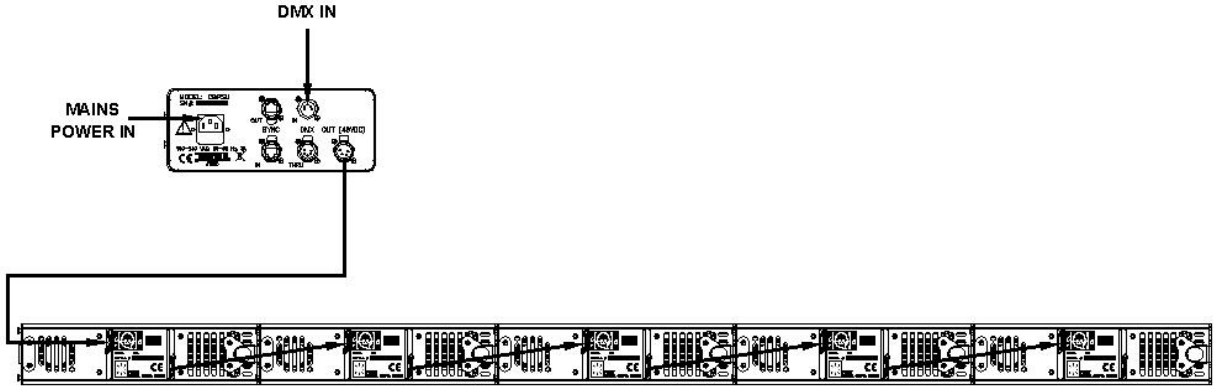

Note: Maximum of 5 Color Block 2 fixtures per cable. No return cables required.

The **Color Block PSU-30** delivers power and data via 6 XLR4 outputs. A maximum of five daisy-chained Color Block 2 fixtures can be connected to each XLR4 output. Return lines are not required. The total cable length of each chain must not exceed 60m/200ft.

It is recommended that a maximum of 20m XLR4 cable length should separate adjacent fixture units to avoid signal deterioration.

Note: Due to the higher levels of leakage current of the PSU-30 it is important that the XLR4 cables used are manufactured only to the specification detailed above. It is also important that the cables are not coupled or uncoupled whilst the PSU is powered and that the PSU is correctly grounded.

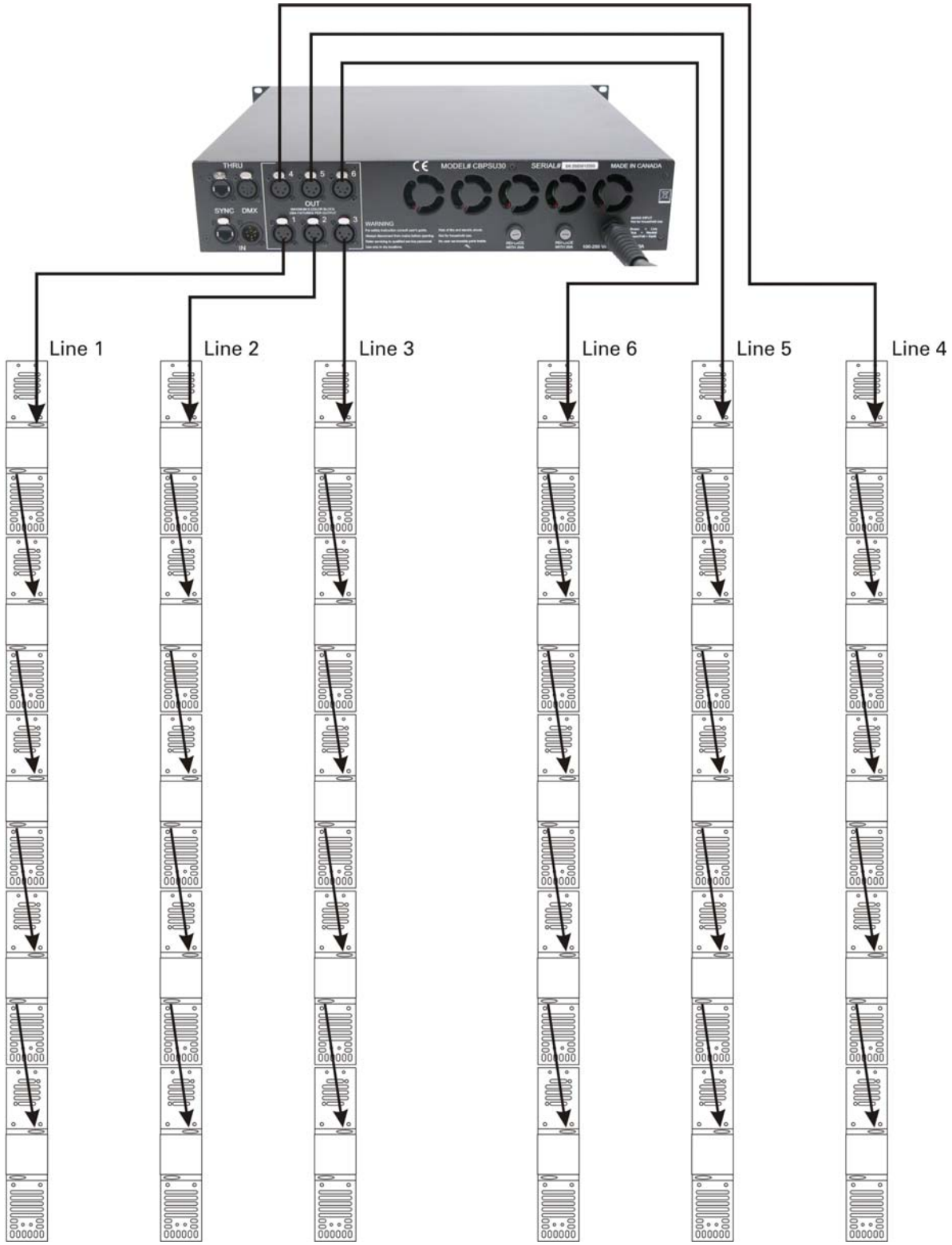
THRU
SYNC
DMX
IN
OUT
4
5
6
1
2
3
MODEL# CBPSU30
SERIAL#
MADE IN CANADA
WARNING
Line 1
Line 2
Line 3
Line 6
Line 5
Line 4

2.3 Fixings

One of the strengths of the Color Block 2 fixture is its flexible fixing possibilities. The Color Block 2 fixture is supplied with an integral M10 clinch nuts at each end. These can be used to attach the Color Block 2 fixture to a standard hook clamp or the wide range of Color Block accessories listed below.

Note: Damage may occur if the bolt is too long (M10x16 maximum). In addition, both sides of the fixture feature a fixing slot designed to accept an M6 bold head.

The Color Block 2 fixture also features an integral connection system to enable up to five units to be locked together as a batten (see below).

Note: it is important to ensure that each fixture is also secured with a safety bond. The end plate of each fixture has a fixing hold to facilitate secondary fixings.

a. Integrated connection system

One end of the Color Block 2 fixture features two protruding locating pins and a catch plate, the other end has two keyhole slots and a butterfly latch.

1. To connect two fixtures together, firstly mate the two protruding pins from one fixture into the keyhole slots of the other.

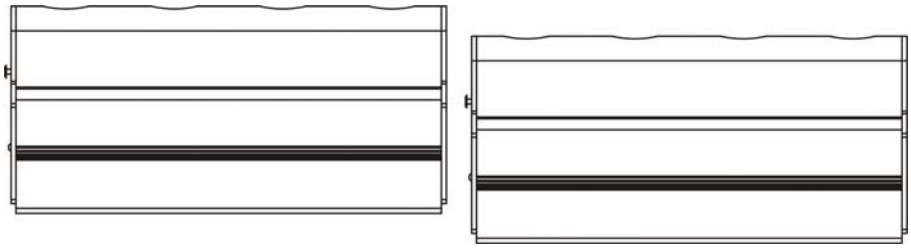

2. Then slide the fixtures together so that they are aligned correctly, taking care to get past the extended catch plate.

Note: This will be stiff on new fixtures and a twisting action may ease assembly.

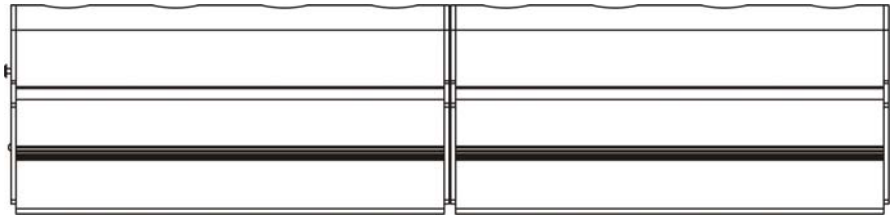

3. Finally use the butterfly latch to secure the fixtures together tightly (max 5 units together).

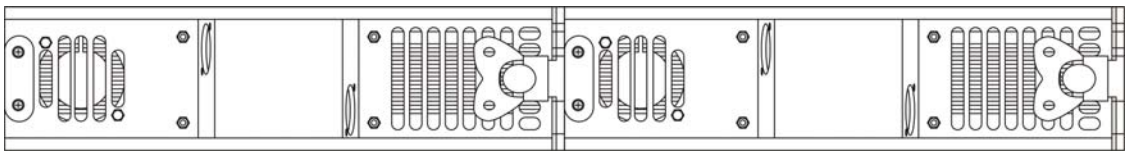

Note: It is important to ensure adequate ventilation to the rear of all Color Block fixtures. Never place the fixtures directly on the floor pointing upwards when configured as a batten.

The Color Block 2 fixture is supplied with an integral M10 clinch nuts at each end. These can be used to attach the Color Block 2 fixture to a standard hook clamp.

Note: damage may occur if the bolt is too long. (M10x16 maximum)

b. Batten bracket kit for up to five fixtures

The batten bracket set is supplied as a pair of brackets with fibre washers and thumb wheels. The batten bracket set can be used for floor mounting (see photo), direct wall mounting and truss mounting when used in conjunction with hook clamps or half couplers.

c. Yoke kit for single fixture

The yoke kit for single fixture is supplied as a yoke bracket with fibre washers and thumb wheels.

The yoke kit can be used for floor mounting (see photo), direct wall mounting and truss mounting when used in conjunction with hook clamps or half couplers.

d. Dual mode yoke kit for single fixture

The dual mode yoke kit for single fixture is supplied with fibre washers and thumb wheels. The dual mode yoke combines the function of the single yoke and the batten bracket.

e. Blinder frame for four fixtures

The blinder frame is supplied as a yoke bracket, side plates, fibre washers, thumb wheels and eight M10 bolts.

The blinder frame is designed to truss mount with the use of a half coupler.

The end plates feature two complete sets of fixture fixing holes. Set one hold the fixtures closely together ensuring equal centres for all sixteen cells. Sets two are adjustable and allow the Color Block 2 fixtures to be splayed out at varying angles.

f. Hinge kit

The hinge kit is supplied as one complete hinge with fibre washers and M10 bolts.

The hinge kit fits between two Color Block 2 fixtures and offers an angle adjustment of 180 deg. If used in multiples, unique shapes can be achieved, such as hexagons, octagons etc.

g. Wall bracket for single fixture

The Wall bracket for single fixture is a discreet fixing suitable for fixing a single Color Block 2 to a wall or set piece. Keyhole slots are provided to for vertical or horizontal fixing.

2.4 Control

The Chroma-Q Color Block 2 is controlled via two models of addressable ANSI E1.11 USITT DMX512-A power supply units, the 5 way Color Block PSU-05B and the 30 way Color Block PSU-30.

The Color Block PSU-05B and PSU-30 menu items are accessed via the LCD display and the following controls:

- Right hand button (red) = Enter (hold for 2 seconds to save)
- Left hand button (blue) = Exit without saving
- Wheel = Adjusts values or scrolls through menu items

The LCD screens shown above are currently at the **Home** position and display: product name and model, software version, current DMX address, current control mode and time.

If left unadjusted at a main menu position for 5 second the LCD screen will revert to the **Home** position.

a. Control Options

3 channel HSI (Hue, Saturation and Intensity) gives 2 colour channels for hue and saturation and a separate intensity channel. A separate definable intensity channel is particularly useful when

creating intensity chases or when the grand master is used. The hue channel has 255 different colours available and the saturation channel specifies the saturation level of that colour. The saturation channel is fully saturated at full. White is achieved with the intensity channel to full and the saturation channel at zero.

3 channel RGB (Red, Green, Blue with *Magic Amber) is the more traditional way of controlling colour changing LED fixtures. Each of the three control channels directly affects the intensity of the corresponding LED. Colour is mixed by adjusting the levels of the three primary colours. White is achieved with all channels at full including *Magic Amber.

3 channel RGB(A) + 1 intensity channel (Red, Green, Blue with *Magic Amber and Intensity) gives 3 control channels directly affecting the intensity of the corresponding LED – Red, Green, Blue with *Magic Amber, and 1 channel affecting the intensity of all RGB(A) channels.

4 channel RGBA (Red, Green, Blue and Amber) gives 4 control channels directly affecting the intensity of the corresponding LED – Red, Green, Blue and Amber. Color is mixed by adjusting the levels of each of the four colors. White is achieved with all channels at full.

Grouping options: grouping by individual "cell", grouping by "block" and "all". A Color Block 2 fixture consists of 4 cells. "Cell" grouping allows individual control of each single cell. In "Block" grouping, the 4 cells in each Color Block 2 fixture are grouped and controlled as 1 block. In "All" grouping, all fixtures connected to a power supply can be controlled as 1 group.

Internal FX engine: modes 1, 4, and 7 incorporate a comprehensive internal FX engine with seven variable parameters to create an unlimited amount of unique lighting effects.

* Magic Amber is the term used for the unit's ability to bring in Amber when mixing colors that require it.

b. Control Menu

Use the wheel to scroll through the control menu positions:

→ **Home / DMX Address**
To set the DMX start address of the PSU-05B/PSU-30, press Enter, scroll wheel to adjust DMX start address, press Enter for 2 seconds to save settings.

→ **Control Mode**
The PSU-05B/PSU-30 can be set to operate in 16 DMX controlled modes for the Color Block 2 system (CB2). Go to "System" and select "CB2". 3 grouping options are available (cell-grouped, block-grouped, all-grouped) with 5 control options: HSIFX, HSI, RGB (with *Magic Amber), RGBA, RGBI (with *Magic Amber), pre-programmed looks and stand alone effects. Refer to the list below for details. Press Enter, scroll wheel to select control mode, and press Enter for 2 seconds to save control mode settings.

Mode	Group	Ch	PSU-05B System: CB2	Ch	PSU-30 System: CB2
1	Variable	67	7FX + 20 x HSI	367	7FX + 120 x HSI
2	Cell	60	20 x HSI	360	120 x HSI
3	Cell	60	20 x RGB (with *Magic Amber)	360	120 x RGB (with *Magic Amber)
4	Block	21	6FX + 5 x HSI	96	6FX + 30 x HSI
5	Block	15	5 x HSI	90	30 x HSI
6	Block	15	5 x RGB (with *Magic Amber)	90	30 x RGB (with *Magic Amber)
7	All	9	6FX + HSI	9	6FX + HSI
8	All	3	1 x HSI	3	HSI
9	All	3	1 x RGB (with *Magic Amber)	3	RGB (with *Magic Amber)
10	Cell	80	20 x RGBA	480	120 x RGBA
11	Cell	80	20 x RGBI (with *Magic Amber)	480	120 x RGBI (with *Magic Amber)
12	Block	20	5 x RGBA	120	30 x RGBA
13	Block	20	5 x RGBI (with *Magic Amber)	120	30 x RGBI (with *Magic Amber)
14	All	4	RGBA	4	RGBA
15	All	4	RGBI (with *Magic Amber)	4	RGBI (with *Magic Amber)
16	Any	1	Look Select	1	Look Select

When DMX is Lost
If DMX is not detected various output options can be selected: Press Enter, scroll wheel to selection, press Enter for 2 seconds to save settings.
Off - will snap to off
Hold - will hold the last valid DMX state
Trig - will default to **Time Trigger** operation
Look 1-31 will snap to the **Look** of your choice

Look Store
The PSU-05B/PSU-30 has 31 internal preset FX Looks for stand alone operation, 1-23 are pre-programmed. To replay a Look in stand alone operation, scroll to Look Store, press Enter, scroll and select the desired Look and press Enter for 2 seconds to save settings. To replay a Look with a DMX console, scroll to Control Mode 16 and press Enter for 2 seconds. Use the DMX console with the assigned channel to playback the various looks stored. (1-31 looks in 1 single channel)

Note: DMX has priority over internal Looks.

Looks can be recorded to the internal flash memory by users and will be preserved on power down. However, looks will be returned to default setting if menu 8 Reset is performed. There are two ways to record a look:

Simple, with DMX console.
Set the PSU-05B/PSU-30 to the desired Control Mode. Use a DMX console to adjust channel levels and create the desired look or effect. Scroll to Look Store and press Enter, scroll to desired Look number and press Enter. Press Enter again for 2 seconds to save Look.

Advanced, stand alone. (DMX is unplugged)
Scroll to Look Store and press Enter, scroll to desired Look and press Enter to access the memory data. The data is presented as two numbers separated by a letter “c”. The number to the left of the c is the channel number and to the right is the channel level. Scrolling to the far end of the wheel will show the Mode at which the selected Look was programmed.

To edit the Mode of a selected Look:
Scroll to Look Store and press Enter, scroll to desired Look and press Enter to access the memory data. Scroll the wheel to the far end until Mode number is shown and press Enter. Scroll wheel to adjust the Mode number. Press Enter to toggle back to the channel numbers.
To edit the channel numbers and levels of a selected Look:
Scroll to Look Store and press Enter, scroll to desired Look and press Enter to access the memory data. Scroll the wheel to select the channel number. To edit the channel level, press Enter and use the scroll wheel to adjust the level (shown as 0-255). Press Enter to toggle back to the channel number. When the desired effect is created press Enter for 2 seconds to save Look.

Time Triggers
The PSU-05B/PSU-30 has real time triggering of the internal Looks. Press Enter and scroll to desired Time Trigger and press Enter. Press Enter to toggle between Day, Hour (24), Minutes and Look to be triggered, adjusting the setting with the scroll wheel as desired. Press Enter for 2 seconds to save settings. By default Time Triggers will occur on all 7 days unless specified. The triggers will only be activated when the feature “When DMX is Lost” is set to Trig.

Set Day and Time
Press Enter to toggle between Day, Hour (24) and Minutes, adjusting the setting with the scroll wheel as desired. When the Day and Time is set correctly press Enter for 2 seconds to save settings.

Display Backlight (Displ. Backlight)
The LED display can be set to go off after 5 seconds of no activity. Press Enter, scroll

wheel to On (permanently) or Off (after 5 seconds) and press Enter for 2 seconds to save settings.

→ **Reset to Default**
Press Enter for 2 seconds to reset all menu items to factory defaults:
DMX address = 001, Control Mode = 1 (67 or 367 channels HSI+FX) , DMX Lost = Hold, Looks = default, Display = On, Frequency = 360, System = CB2

→ **System**
The PSU-05B/PSU-30 can be set to operate for the Color Block DB4 system (CB1) and the Color Block 2 system (CB2). Press Enter, scroll wheel to select CB1 or CB2, press Enter for 2 seconds to save settings.

→ **Frequency**
The PSU-05B/PSU-30 has four frequency settings available - 360, 600, 1200, 2400. This allows for the LED scan rate to be synchronised with the video camera and avoid a flickering effect. Press Enter, scroll wheel to select frequency, press Enter for 2 seconds to save settings.

→ **Sync Mode**
In normal operation internally generated FX should stay synchronised between the PSU-05B's/PSU-30's for approx 30 minutes. If better synchronisation is required a timing signal can be run via a RJ45 patch (not crossover) cable between PSU's. In order for this to work correctly one PSU-05B or PSU-30 must be designated as the Master and all the others must be set to Slave.
Press Enter and use the scroll wheel to select Master or Slave. Press Enter for 2 seconds to save setting.

c. PSU-05B DMX Personality Mode 1-3

	In mode 1 grouping is variable & in modes 2 -3 each cell is a group		
PSU-05B (v2.1)	**Mode 1 (67ch) 7FX + 20 x HSI**	**Mode 2 (60ch) 20 x HSI**	**Mode 3 (60ch) 20 x RGB** (with *Magic Amber)
Channel 1	**Grouping** **0-100** Variable grouping range between 1-20 cells with FX running within the group. **102-206** variable grouping range between 1-20 cells with FX running between the groups. **209-255** Variable grouping range for every 2nd to every 20th cells in a group.	Hue group 1	Red group 1
Channel 2	**Colour Speed** **0-255** Variable speed of colour scrolling. From static at 0 to maximum at 255.	Saturation group 1	Green group 1
Channel 3	**Colour Fan** **0-255** Variable fan of colour between / within groups. All units are the same colour at 0.	Intensity group 1	Blue group 1
Channel 4	**Colour Range** **0** Full spectrum **1-255** Variable limit of spectrum for colour scrolling. Single colour at 1, full spectrum at 255.	Hue group 2	Red group 2
Channel 5	**Colour Step** **0-255** Variable control of smoothness of colour scrolling. Smoothest is at 0. Most coarse is at 250. Rate will vary with scrolling speed. 255 will override effects and switch to RGB.	Saturation group 2	Green group 2
Channel 6	**Intensity Effects** **0** Static **1-63** Fade on, fade off. Variable range, 63 the fastest **64-127** Fade on, snap off. Variable range, 127 the fastest	Intensity group 2	Blue group 2

	128-191 Snap on, fade off. Variable range, 191 the fastest. **192-255** Snap on, snap off (strobe). Variable range, 255 the fastest.		
Channel 7	**Intensity Fan** 0-255 Variable fan of intensity effect between / within groups. All units at the same intensity at 0. Alternating units on and off at 255.	Hue group 3	Red group 3
Channel 8	Hue for group 1	Saturation group 3	Green group 3
Channel 9	Saturation for group 1	Intensity group 3	Blue group 3
Channel 10	Intensity for group 1	Hue group 4	Red group 4
Channel 11	Hue for group 2	Saturation group 4	Green group 4
Channel 12	Saturation for group 2	Intensity group 4	Blue group 4
Channel 13	Intensity for group 2	Hue group 5	Red group 5
	...and so on up to group 20		
Total	**67 DMX channels**	**60 DMX channels**	**60 DMX channels**

d. PSU-05B DMX Personality Mode 4-6

	In modes 4-6, the 4 cells of a fixture is a group (Block)		
PSU-05B (v2.1)	**Mode 4 (21ch) 6FX + 5 x HSI**	**Mode 5 (15ch)** **5 x HSI**	**Mode 6 (15ch)** **5 x RGB** (with *Magic Amber)
Channel 1	**Colour Speed** **0-255** Variable speed of colour scrolling. From static at 0 to maximum at 255.	Hue group 1	Red group 1
Channel 2	**Colour Fan** **0-255** Variable fan of colour between groups. All units are the same colour at 0.	Saturation group 1	Green group 1
Channel 3	**Colour Range** **0** Full spectrum **1-255** Variable limit of spectrum for colour scrolling. Single colour at 1, full spectrum at 255.	Intensity group 1	Blue group 1
Channel 4	**Colour Step** **0-255** Variable control of smoothness of colour scrolling. Smoothest is at 0. Most coarse is at 250. Rate will vary with scrolling speed. 255 will override effects and switch to RGB.	Hue group 2	Red group 2
Channel 5	**Intensity Effects** **0** Static **1-63** Fade on, fade off. Variable range, 63 the fastest **64-127** Fade on, snap off. Variable range, 127 the fastest **128-191** Snap on, fade off. Variable range, 191 the fastest. **192-255** Snap on, snap off (Strobe). Variable range, 255 the fastest.	Saturation group 2	Green group 2
Channel 6	**Intensity Fan** 0-255 Variable fan of intensity effect between groups. All units at the same intensity at 0. Alternating units on & off at 255.	Intensity group 2	Blue group 2
Channel 7	Hue for group 1	Hue group 3	Red group 3
Channel 8	Saturation for group 1	Saturation group 3	Green group 3
Channel 9	Intensity for group 1	Intensity group 3	Blue group 3
Channel 10	Hue for group 2	Hue group 4	Red group 4
Channel 11	Saturation for group 2	Saturation group 4	Green group 4
Channel 12	Intensity for group 2	Intensity group 4	Blue group 4
Channel 13	Hue for group 3	Hue group 5	Red group 5
	...and so on up to group 5		
Total	**21 DMX channels**	**15 DMX channels**	**15 DMX channels**

e. PSU-O5B DMX Personality Mode 7-9

	In modes 7-9 all fixtures in the output are a group (All)		
PSU-05B (v2.1)	**Mode 7 (9ch) 6FX + HSI**	**Mode 8 (3ch) HSI**	**Mode 9 (3ch) RGB** (with *Magic Amber)
Channel 1	**Colour Speed** **0-255** Variable speed of colour scrolling. From static at 0 to maximum at 255.	Hue group 1	Red group 1
Channel 2	**Colour Fan** **0-255** Variable fan of colour within group. All units are the same colour at 0.	Saturation group 1	Green group 1
Channel 3	**Colour Range** **0** Full spectrum **1-255** Variable limit of spectrum for colour scrolling. Single colour at 1, full spectrum at 255.	Intensity group 1	Blue group 1
Channel 4	**Colour Step** **0-255** Variable control of smoothness of colour scrolling. Smoothest is at 0. Most coarse is at 250. Rate will vary with scrolling speed. 255 will override effects and switch to RGB.		
Channel 5	**Intensity Effects** **0** Static **1-63** Fade on, fade off . Variable range, 63 the fastest **64-127** Fade on, snap off. Variable range, 127 the fastest **128-191** Snap on, fade off. Variable range, 191 the fastest. **192-255** Snap on, snap off (Strobe). Variable range, 255 the fastest.		
Channel 6	**Intensity Fan** 0-255 Variable fan of intensity effect within group. All units at the same intensity at 0. Alternating units on and off at 255.		
Channel 7	Hue group 1		
Channel 8	Saturation group 1		
Channel 9	Intensity group 1		
Total	**9 DMX channels**	**3 DMX channels**	**3 DMX channels**

f. PSU-05B DMX Personality Mode 10-11

	In modes 10-11 each cell is a group	
PSU-05B (v2.1)	**Mode 10 (80ch) RGBA**	**Mode 11 (80ch) RGBI** (with *Magic Amber)
Channel 1	Red group 1	Red group 1
Channel 2	Green group 1	Green group 1
Channel 3	Blue group 1	Blue group 1
Channel 4	Amber group 1	Intensity group 1
Channel 5	Red group 2	Red group 2
Channel 6	Green group 2	Green group 2
Channel 7	Blue group 2	Blue group 2
Channel 8	Amber group 2	Intensity group 2
Channel 9	Red group 3	Red group 3
Channel 10	Green group 3	Green group 3
Channel 11	Blue group 3	Blue group 3
Channel 12	Amber group 3	Intensity group 3
Channel 13	Red group 4	Red group 4
	...and so on up to group 20	
	80 DMX channels	**80 DMX channels**

g. PSU-05B DMX Personality Mode 12-13

	In modes 12-13, the 4 cells of a fixture is a group (Block)	
PSU-05B (v2.1)	**Mode 12 (20ch) RGBA**	**Mode 13 (20ch) RGBI** (with *Magic Amber)
Channel 1	Red group 1	Red group 1
Channel 2	Green group 1	Green group 1
Channel 3	Blue group 1	Blue group 1
Channel 4	Amber group 1	Intensity group 1
Channel 5	Red group 2	Red group 2
Channel 6	Green group 2	Green group 2
Channel 7	Blue group 2	Blue group 2
Channel 8	Amber group 2	Intensity group 2
Channel 9	Red group 3	Red group 3
Channel 10	Green group 3	Green group 3
Channel 11	Blue group 3	Blue group 3
Channel 12	Amber group 3	Intensity group 3
Channel 13	Red group 4	Red group 4
	...and so on up to group 5	
	20 DMX channels	**20 DMX channels**

h. PSU-05B DMX Personality Mode 14-15

	In modes 14-15 all fixtures in the output are a group (All)	
PSU-05B (v2.1)	**Mode 14 (4ch) RGBA**	**Mode 15 (4ch) RGBI** (with *Magic Amber)
Channel 1	Red group 1	Red group 1
Channel 2	Green group 1	Green group 1
Channel 3	Blue group 1	Blue group 1
Channel 4	Amber group 1	Intensity group 1
	4 DMX channels	**4 DMX channels**

i. PSU-05B DMX Personality Mode 16

	In mode 16 grouping is variable
PSU-05B (v2.1)	**Mode 16 (1ch) Look Store**
Channel 1	Channel levels and the corresponding Look numbers:

Channel Level (%)	Look	Channel Level (%)	Look	Channel Level (%)	Look
0	OFF	33–35	11	69-71	22
1–2	1	36-38	12	72-74	23
3–5	2	39-42	13	75-78	24
6–9	3	43-45	14	79-81	25
10–11	4	46-48	15	83-85	26
12–15	5	49-51	16	86-88	27
16–19	6	52-54	17	89-91	28
20–22	7	56-58	18	92-94	29
23-25	8	59-61	19	95-97	30
26–27	9	62-64	20	98-100	31
29-32	10	65-68	21		

j. PSU-30 DMX Personality Mode 1-3

	In mode 1 grouping is variable & in modes 2 -3 each cell is a group		
PSU-30 (v2.1)	**Mode 1 (367ch) 7FX + 120 x HSI**	**Mode 2 (360ch) 120 x HSI**	**Mode 3 (360ch) 120 x RGB** (with *Magic Amber)
Channel 1	**Grouping** **0-100** Variable grouping range between 1-120 cells with FX running within the group. **102-206** variable grouping range between 1-120 cells with FX running between the groups. **209-255** Variable grouping range for every 2nd	Hue group 1	Red group 1

	to every 120th cells in a group.		
Channel 2	**Colour Speed** **0-255** Variable speed of colour scrolling. From static at 0 to maximum at 255.	Saturation group 1	Green group 1
Channel 3	**Colour Fan** **0-255** Variable fan of colour between / within groups. All units are the same colour at 0.	Intensity group 1	Blue group 1
Channel 4	**Colour Range** **0** Full spectrum **1-255** Variable limit of spectrum for colour scrolling. Single colour at 1, full spectrum at 255.	Hue group 2	Red group 2
Channel 5	**Colour Step** **0-255** Variable control of smoothness of colour scrolling. Smoothest is at 0. Most coarse is at 250. Rate will vary with scrolling speed. 255 will override effects and switch to RGB.	Saturation group 2	Green group 2
Channel 6	**Intensity Effects** **0** Static **1-63** Fade on, fade off. Variable range, 63 the fastest **64-127** Fade on, snap off. Variable range, 127 the fastest **128-191** Snap on, fade off. Variable range, 191 the fastest. **192-255** Snap on, snap off (strobe). Variable range, 255 the fastest.	Intensity group 2	Blue group 2
Channel 7	**Intensity Fan** 0-255 Variable fan of intensity effect between / within groups. All units at the same intensity at 0. Alternating units on and off at 255.	Hue group 3	Red group 3
Channel 8	Hue for group 1	Saturation group 3	Green group 3
Channel 9	Saturation for group 1	Intensity group 3	Blue group 3
Channel 10	Intensity for group 1	Hue group 4	Red group 4
Channel 11	Hue for group 2	Saturation group 4	Green group 4
Channel 12	Saturation for group 2	Intensity group 4	Blue group 4
Channel 13	Intensity for group 2	Hue group 5	Red group 5
	...and so on up to group 120		
Total	**367 DMX channels**	**360 DMX channels**	**360 DMX channels**

k. PSU-30 DMX Personality Mode 4-6

	In modes 4-6, the 4 cells of each fixture is a group (Block)		
PSU-30 (v2.1)	**Mode 4 (96ch) 6FX + 30 x HSI**	**Mode 5 (90ch)** **30 x HSI**	**Mode 6 (90ch)** **30 x RGB** (with *Magic Amber)
Channel 1	**Colour Speed** **0-255** Variable speed of colour scrolling. From static at 0 to maximum at 255.	Hue group 1	Red group 1
Channel 2	**Colour Fan** **0-255** Variable fan of colour between groups. All units are the same colour at 0.	Saturation group 1	Green group 1
Channel 3	**Colour Range** **0** Full spectrum **1-255** Variable limit of spectrum for colour scrolling. Single colour at 1, full spectrum at 255.	Intensity group 1	Blue group 1
Channel 4	**Colour Step** **0-255** Variable control of smoothness of colour scrolling. Smoothest is at 0. Most coarse is at	Hue group 2	Red group 2

	250. Rate will vary with scrolling speed. 255 will override effects and switch to RGB.		
Channel 5	**Intensity Effects** **0** Static **1-63** Fade on, fade off . Variable range, 63 the fastest **64-127** Fade on, snap off. Variable range, 127 the fastest **128-191** Snap on, fade off. Variable range, 191 the fastest. **192-255** Snap on, snap off (Strobe). Variable range, 255 the fastest.	Saturation group 2	Green group 2
Channel 6	**Intensity Fan** 0-255 Variable fan of intensity effect between groups. All units at the same intensity at 0. Alternating units on and off at 255.	Intensity group 2	Blue group 2
Channel 7	Hue for group 1	Hue group 3	Red for group 3
Channel 8	Saturation for group 1	Saturation group 3	Green for group 3
Channel 9	Intensity for group 1	Intensity group 3	Blue for group 3
Channel 10	Hue for group 2	Hue group 4	Red for group 4
Channel 11	Saturation for group 2	Saturation group 4	Green for group 4
Channel 12	Intensity for group 2	Intensity group 4	Blue for group 4
Channel 13	Hue for group 3	Hue group 5	Red for group 5
	...and so on up to group 30		
Total	**96 DMX channels**	**90 DMX channels**	**90 DMX channels**

I. PSU-30 DMX Personality Mode 7-9

	In modes 7-9 all fixtures in all the outputs are a group (All)		
PSU-30 (v2.1)	**Mode 7 (9ch) 6FX + HSI**	**Mode 8 (3ch) HSI**	**Mode 9 (3ch) RGB** (with *Magic Amber)
Channel 1	**Colour Speed** **0-255** Variable speed of colour scrolling. From static at 0 to maximum at 255.	Hue group 1	Red group 1
Channel 2	**Colour Fan** **0-255** Variable fan of colour within group. All units are the same colour at 0.	Saturation group 1	Green group 1
Channel 3	**Colour Range** **0** Full spectrum **1-255** Variable limit of spectrum for colour scrolling. Single colour at 1, full spectrum at 255.	Intensity group 1	Blue group 1
Channel 4	**Colour Step** **0-255** Variable control of smoothness of colour scrolling. Smoothest is at 0. Most coarse is at 250. Rate will vary with scrolling speed. 255 will override effects & switch to RGB.		
Channel 5	**Intensity Effects** **0** Static **1-63** Fade on, fade off . Variable range, 63 the fastest **64-127** Fade on, snap off. Variable range, 127 the fastest **128-191** Snap on, fade off. Variable range, 191 the fastest. **192-255** Snap on, snap off (Strobe). Variable range, 255 the fastest.		
Channel 6	**Intensity Fan** 0-255 Variable fan of intensity effect within group. All units at the same intensity at 0. Alternating units on and off at 255.		
Channel 7	Hue for group 1		

Channel 8	Saturation for group 1		
Channel 9	Intensity for group 1		
Total	**9 DMX channels**	**3 DMX channels**	**3 DMX channels**

m. PSU-30 DMX Personality Mode 10-11

	In modes 10-11 each cell is a group	
PSU-30 (v2.1)	**Mode 10 (480ch) RGBA**	**Mode 11 (480ch) RGBI** (with *Magic Amber)
Channel 1	Red for group 1	Red for group 1
Channel 2	Green for group 1	Green for group 1
Channel 3	Blue for group 1	Blue for group 1
Channel 4	Amber for group 1	Intensity for group 1
Channel 5	Red for group 2	Red for group 2
Channel 6	Green for group 2	Green for group 2
Channel 7	Blue for group 2	Blue for group 2
Channel 8	Amber for group 2	Intensity for group 2
Channel 9	Red for group 3	Red for group 3
Channel 10	Green for group 3	Green for group 3
Channel 11	Blue for group 3	Blue for group 3
Channel 12	Amber for group 3	Intensity for group 3
Channel 13	Red for group 4	Red for group 4
Channel 13	...and so on up to group 120	
	480 DMX channels	**480 DMX channels**

n. PSU-30 DMX Personality Mode 12-13

	In modes 12-13, the 4 cells in a fixture is a group (Block)	
PSU-30 (v2.1)	**Mode 12 (120ch) RGBA**	**Mode 13 (120ch) RGBI** (with *Magic Amber)
Channel 1	Red for group 1	Red for group 1
Channel 2	Green for group 1	Green for group 1
Channel 3	Blue for group 1	Blue for group 1
Channel 4	Amber for group 1	Intensity for group 1
Channel 5	Red for group 2	Red for group 2
Channel 6	Green for group 2	Green for group 2
Channel 7	Blue for group 2	Blue for group 2
Channel 8	Amber for group 2	Intensity for group 2
Channel 9	Red for group 3	Red for group 3
Channel 10	Green for group 3	Green for group 3
Channel 11	Blue for group 3	Blue for group 3
Channel 12	Amber for group 3	Intensity for group 3
Channel 13	Red for group 4	Red for group 4
Channel 13	...and so on up to group 30	
	120 DMX channels	**120 DMX channels**

o. PSU-30 DMX Personality Mode 14-15

	In modes 14-15 all fixtures in all the outputs are a group (All)	
PSU-30 (v2.1)	**Mode 14 (4ch) RGBA**	**Mode 13 (4ch) RGBI** (with *Magic Amber)
Channel 1	Red for group 1	Red for group 1
Channel 2	Green for group 1	Green for group 1
Channel 3	Blue for group 1	Blue for group 1
Channel 4	Amber for group 1	Intensity for group 1
	4 DMX channels	**4 DMX channels**

p. PSU-30 DMX Personality Mode 16

	In mode 16 grouping is variable
PSU-30 (v2.1)	**Mode 16 (1ch) Look Store**

Channel 1	Channel levels and the corresponding Look numbers:

Channel Level (%)	Look	Channel Level (%)	Look	Channel Level (%)	Look
0	OFF	33–35	11	69-71	22
1–2	1	36-38	12	72-74	23
3–5	2	39-42	13	75-78	24
6–9	3	43-45	14	79-81	25
10–11	4	46-48	15	83-85	26
12–15	5	49-51	16	86-88	27
16–19	6	52-54	17	89-91	28
20–22	7	56-58	18	92-94	29
23-25	8	59-61	19	95-97	30
26–27	9	62-64	20	98-100	31
29-32	10	65-68	21		

3. Troubleshooting

Troubleshooting is a process of elimination. First, rule out the other field factors (i.e. bad connections, faulty cables and power supplies). For technical advice and/or parts, please contact your selling dealer or the offices listed in this manual.

Symptom	Possible Cause	Solution
Fixture does not respond to DMX control.	PSU set to wrong or different DMX address. Bad cable connecting DMX control and PSU. Bad cable connecting PSU and the fixture. Bad in/thru connection between adjacent fixtures. Fan not working.	Check DMX address and Mode settings. Check/replace DMX run from the console. Check/replace cable from PSU to fixture or in/thru connections. Call selling dealer if fan is not working.
Intensity levels of LED are fluctuating.	Signal deterioration, cable lengths connecting adjacent fixtures are too long.	Check the cable length and configuration.
Fixture does not respond to DMX control but PSU and all cable connection are good.	Electronics fault in the fixture unit.	Call selling dealer.
Noise from fixture unit.	Fan malfunction.	Check fan and call selling dealer.

4. Specification

4.1 Technical specifications – Color Block 2

Product Code:	CHCB4M2
Dimensions:	250mm x 62mm x 117mm 9.8" x 2.4" x 4.6"
Weight:	1.3kg / 2.8lbs
Power input rating:	48V DC
Control protocol:	ANSI E1.1 DMX-512A
Connector in/out:	XLR4
Maximum cable run:	60m / 200’
Cooling system:	1 x fan
Construction:	Anodised aluminium extrusion

Colour:	Black
LED cells:	4
LED per cell:	12 RGBA
Total LED:	48
Optics:	Specialised close focus lens
Beam angle:	25° (approx.)
Beam dispersion:	Symmetrical direct illumination
CCT:	Adjustable 1000 – 10000K
Lamp life:	Up to 25,000 hours
Operating temperature:	0°C to +40°C
IP rating:	IP20
Approvals:	EN55103-1, EN55103-2, IEC60950

LICENSED BY COLOR KINETICS

4.2 Technical specifications – Color Block Power Supply Units

Product code:	CHCBPSU05	CHCBPSU30
Dimensions:	279mm × 219mm × 88mm 11" × 8.6" × 3.5"	483mm × 368mm × 89mm 19" × 14.5" × 3.5"
Weight:	3.9kg / 8.6lbs	11.1kg / 24.5lbs
Working Voltage:	100-240VAC 50/60Hz (auto-switching)	100-240VAC 50/60Hz (auto-switching)
Power consumption:	4A @ 120VAC; 2A @ 240VAC	18A @120VAC; 9A @ 240VAC
Output connectors:	XLR4	XLR4
Sync:	Ethercon RJ45 in/through	Ethercon RJ45 in/through
Control:	ANSI E1.11 USITT DMX 512-A	ANSI E1.11 USITT DMX 512-A
Power connector:	IEC male chassis	Trailing lead
Fuses:	6A 20mm spare included 110V - 2 x 20A 1.25" ceramic	Both live and neutral are fused 220V - 2 x 10A 1.25" ceramic
Operating temperature:	0° C to + 40° C	0° C to + 40° C
Body colour:	Black powder coated paint	Black powder coated paint
IP rating:	IP20	IP20
Cooling:	1 x rear mounted fans, front/rear ventilation required	5 x rear mounted fans, front/rear ventilation required
Approvals:	EN55103-1, EN55103-2, IEC60950	

US C entela Certified

4.3 Photometric Performance

Photometric data for colour white

	3'/1m	6'/2m	9'/3m	12'/4m	15'/5m
FC	182	49	23	14	8
Lux	1960	526	246	146	88

Photometric data for colour red

	3'/1m	6'/2m	9'/3m	12'/4m	15'/5m
FC	86	23	11	6	4
Lux	930	247	15	68	41

Photometric data for colour green

	3'/1m	6'/2m	9'/3m	12'/4m	15'/5m
FC	152	41	19	11	7
Lux	1637	438	203	117	76

Photometric data for colour blue

	3'/1m	6'/2m	9'/3m	12'/4m	15'/5m
FC	18	5	2	1	1
Lux	192	51	24	14	9

Photometric data for colour amber

	3'/1m	6'/2m	9'/3m	12'/4m	15'/5m
FC	88	24	10	7	4
Lux	952	253	110	72	41

Light Output

Color	White	Red	Green	Blue	Amber
Output	532	266	445	56	242

4.4 Drawings

Color Block 2

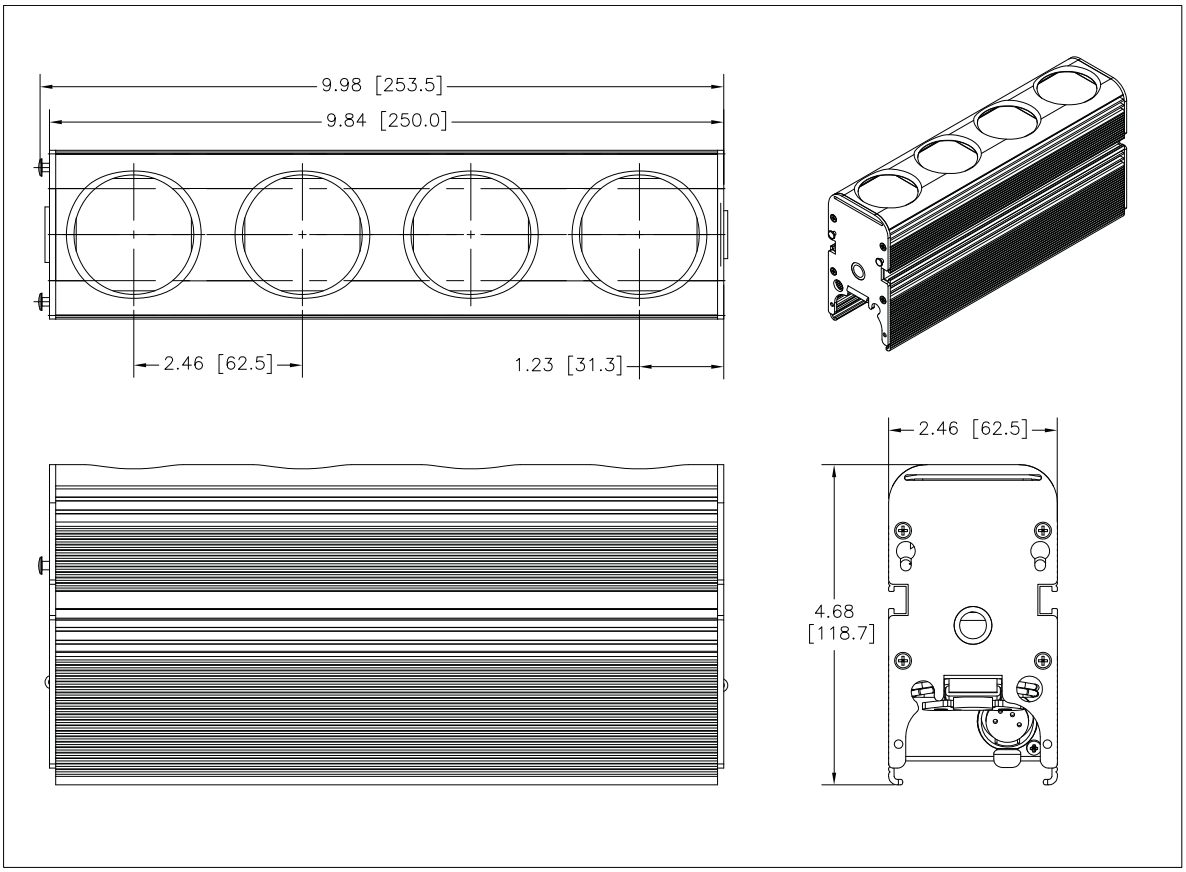

PSU05B

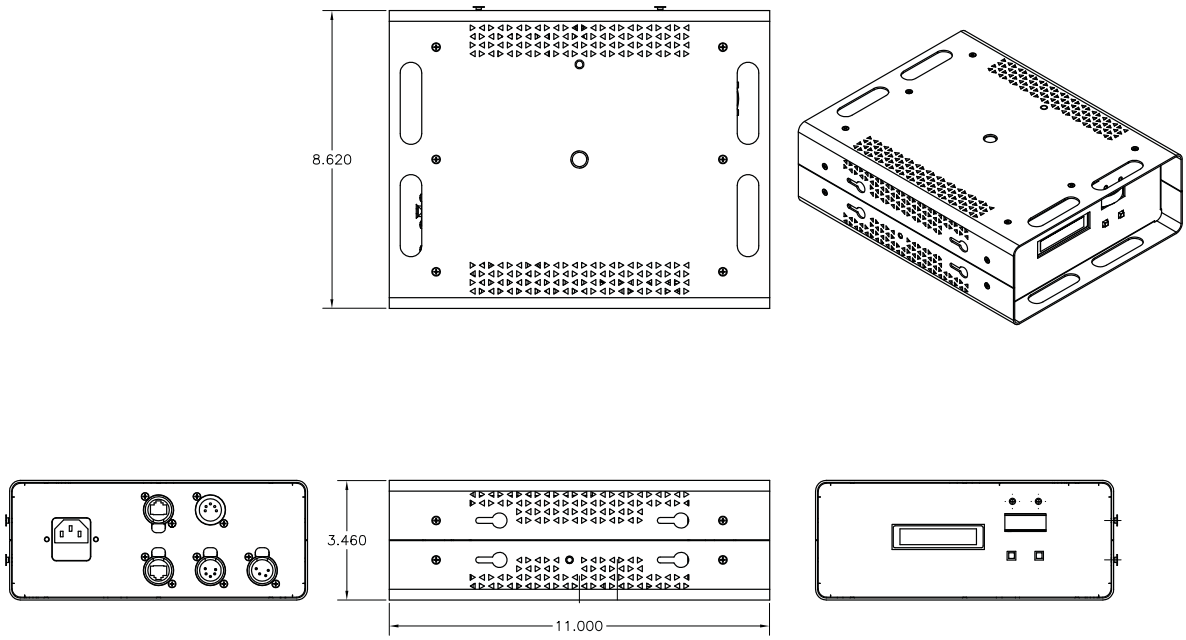

PSU30

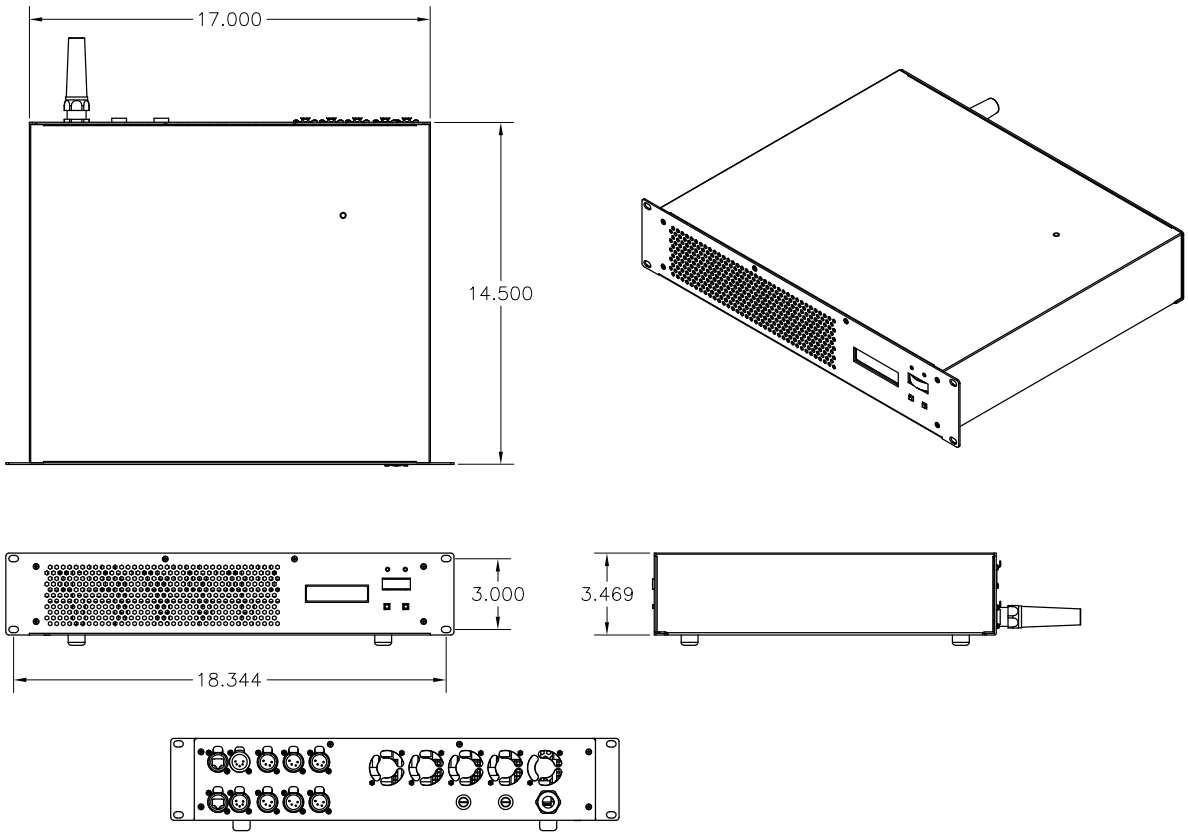

5. Maintenance

With care, the Color Block 2 fixture and power supply units will require little maintenance. However, as the unit is likely to be used in a stage environment we recommend periodical internal inspection and cleaning of any resulting dust and cracked oil residue.

Do not spray liquids on the front or rear panel. If the front enclosure requires cleaning, wipe with a mild detergent on a damp cloth.

6. Battery Replacement

The CR20/32 Lithium battery should last approximately 5 years from the date the battery was made – note that a 4 year life from date of product sale would not be unexpected when delivery and manufacturing times are allowed for.

Caution: Danger of explosion if battery is incorrectly replaced. Replace only with the same or equivalent type recommended by the manufacturer. Dispose of used batteries according to the battery manufacturer's instructions and local regulations.

7. Installation

Unique Magic Box interlocking enclosure of the PSU-05B facilitates easy rack mounting when used in pairs and easy truss mounting via captive nut insert. Rack mounting brackets are available in single unit and dual unit versions, enabling you to customise your equipment rack or installation by mixing and matching different Magic Box interface units. Ensure adequate ventilation around the holes in the enclosure. Failure to allow adequate ventilation may result in premature failure of the unit.

The Color Block PSU-30 must be installed in a 2U rack mounted enclosure and be supported front and rear. Ensure adequate ventilation around the front and rear of the enclosure. Failure to allow adequate ventilation may result in premature failure of the unit.

8. Wiring

Power in, mains voltage

PSU-05B: IEC Power Cord

PSU-30: Europe - Live = brown, neutral =blue, earth = green / yellow

North America - Live = black, neutral = white, ground = green

DMX Input - XLR5

Pin#	Function
1	Ground (Screen)
2	Data Minus
3	Data Plus
4	Spare Data Minus
5	Spare Data Plus

Power/Data Output - XLR4

Pin #	Function
1	Ground (-ve)
2	Control data minus (-)
3	Control data plus (+)
4	24V DC (+ve)
Chassis	Cable shield/drain wire

Note: Due to the higher levels of leakage current of the PSU-30 it is important that the XLR4 cables used are manufactured only to the specification detailed above. It is also important that the cables are not coupled or uncoupled whilst the PSU is powered and that the PSU is correctly grounded.

SYNC - RJ45

Used to synchronise the FX running on multiple PSU-05Bs. A straight wired RJ45 patch cable is suitable to connect units (not a crossover cable).

Note: The SYNC connector on the PSU-05B is not using Ethernet.

9. Accessories

Model	Part No
Yoke kit for single Color Block	CHCBSY
Dual mode yoke kit for single Color Block	CHCBCY
Batten bracket kit for up to 5 Color Block units	CHCBBB
Blinder frame for 4 Color Block units	CHCBBF4
Hinge kit for Color Block	CHCBHP
Wall bracket for single Color Block	CHCBWB
LED pipe for Color Block 1.3m / 4′ (5-way batten)	CHCBLP1300
LED pipe for Color Block 0.25m / 9.8″ (single)	CHCBLP250
Single link cable for use in batten format	MUCX4SDP-0.22
Other cable lengths available (‘x’ is length in m)	MUCX4SDP-X

LED Pipe

The LED pipe is available in 250mm and 1300mm lengths and simply snaps into the fixing slots on the fixture body. The LED pipe blends and diffuses the RGBA LED output of adjacent cells, taking the resulting colour. The LED pipe is particularly effective at linear colour chase effects.